PDHonline Course S299 (4 PDH)

Calculating Design Loads for Residential Structures

Instructor: John C. Huang, Ph.D., PE & George Thomas, PE

2020

PDH Online | PDH Center

5272 Meadow Estates Drive
Fairfax, VA 22030-6658
Phone: 703-988-0088
www.PDHonline.com

An Approved Continuing Education Provider

Calculating Design Loads for Residential Structures

George E. Thomas, PE

1.1 General

Loads are the primary consideration in any building design. They define the nature and magnitude of hazards or external forces that a building must resist to provide reasonable performance (i.e., safety and serviceability) throughout the useful life of the structure. The anticipated loads are influenced by a building's occupancy and function, size and shape, and climate and site conditions. The type and magnitude of design loads affect critical decisions such as material selection, construction details, and architectural configuration. In optimizing the value (i.e., performance versus economy) of the residential building, it is essential to apply design loads realistically.

While the buildings considered in this course are single-family detached and attached dwellings, the principles and concepts related to building loads apply to other similar types of construction as well, such as low-rise apartment buildings. The design loads recommended here are based on applicable provisions of the ASCE 7 standard–*Minimum Design Loads for Buildings and Other Structures.* The ASCE standard represents an acceptable practice for building loads in the United States and is recognized in virtually every building code. It is important for the engineer to become familiar with the provisions, commentary, and technical references contained in the ASCE standard.

The structural design of residential structures has not been treated as a unique engineering discipline or subjected to a special effort to develop better, more efficient design practices. This course will focus on those aspects of technical resources that are particularly relevant to the determination of design loads for residential structures. The course will provide supplemental design and calculations that addresses aspects of residential construction where current practice is either silent or improvement may be needed. The course provides methods for determining if design loads are complete and are tailored to typical residential conditions. As with any design function, the engineer must ultimately understand and approve the loads for a given project as well as the overall design methodology, including all its inherent strengths and weaknesses. Since building codes vary widely in their treatment of design loads the engineer should, as a matter of due diligence, identify variances from both local area accepted practice and the applicable building code relative to design loads as presented here, even though any variances may be considered technically sound.

Complete design of a residential structure requires the evaluation of several different types of construction materials. Some material specifications use the allowable stress design (ASD) approach while others use load and resistance factor design (LRFD). For a single project, it may be necessary to determine loads in accordance with both design formats. The information herein will provide load combinations intended for each method. The determination of individual nominal loads is essentially unaffected. Special loads such as flood loads, ice loads, and rain loads will not be addressed. The engineer must refer to the ASCE standard and applicable building code provisions regarding those special loads.

1.2 Load Combinations

The load combinations shown in Table 1.1 are recommended for use with design specifications based on allowable stress design (ASD) and load and resistance factor design (LRFD). Load combinations provide the basic set of building load conditions that should be considered by the engineer. They establish the proportioning of multiple transient loads that may assume point-in-time values when the load of interest reaches its extreme design value. Load combinations are intended as a guide to the engineer, who must exercise judgment in any particular application. The load combinations in Table 1.1 are appropriate for use with the design loads determined in accordance with this course.

The principle of proportion loads recognizes that when one load reaches its maximum lifetime value, the other loads assume arbitrary point in time values associated with the structure's normal or sustained loading conditions. The introduction of LRFD has drawn greater attention to this principle. The proportioning of loads for allowable stress design (ASD) is consistent with loads used in LRFD load combinations. This manner of proportioning ASD loads has had only limited use in current code recognized documents and design load specifications. ASD load combinations found in building codes have included some degree of proportioning (i.e., D + W + 1/2S) and have usually made allowance for a special reduction for multiple transient loads. Some earlier codes have also permitted allowable material stress increases for load combinations involving wind and earthquake loads. However, none of these adjustments for ASD load combinations is recommended for use with Table 1.1 since the load proportioning is considered sufficient.

The wind load factor of 1.5 in Table 1.1 used for load and resistant factor design is consistent with traditional wind design practice (ASD and LRFD) and has proven adequate in hurricane-prone environments when buildings are properly designed and constructed. The 1.5 factor is equivalent to the earlier use of a 1.3 wind load factor in that the wind load provisions of ASCE 7 include separate consideration of wind directionality by adjusting wind loads by an explicit wind directionality factor, K_d, of 0.85. Since the wind load factor of 1.3 included this effect, it must be adjusted to 1.5 in compensation for adjusting the design wind load instead (i.e., 1.5/1.3 = 0.85). The 1.5 factor may be considered conservative relative to traditional design practice in nonhurricane-prone wind regions as indicated in the calibration of the LRFD load factors to historic ASD design practice. In addition, newer design wind speeds for hurricane-prone areas account for variation in the extreme (i.e., long return period) wind probability that occurs in hurricane hazard areas. The return period of the design wind speeds along the hurricane-prone coast varies between a 70 to 100 year return periods on the wind map in ASCE 7 (i.e., not a traditional 50-year return period wind speed used for the remainder of the United States). Given that this standard will likely be referenced in building codes, the engineer should be using the higher wind load factor for LRFD than that shown in Table 1.1. The above discussion is intended to help understand the recent departure from past successful design experience and remain cognizant of its potential future impact to building design.

The load combinations in Table 1.1 are simplified and tailored to specific application in residential construction and the design of typical components and systems in a home. These or similar load combinations are often used in practice as shortcuts to those load combinations that govern the design result. This course provides you with the effective use of the shortcuts and demonstrates them in the examples provided later. These shortcuts are intended only recommended for the design of residential light-frame construction.

TABLE 1.1 Typical Load Combinations Used for the Design of Components and Systems

Component or System	ASD Load Combinations	LRFD Load Combinations
Foundation wall (gravity and soil lateral loads)	D + H D + H + L + 0.3 (L_r + S) D + H + (L_r or S) + 0.3 L	1.2D + 1.6H 1.2D + 1.6H + 1.6L + 0.5(L_r + S) 1.2D + 1.6H + 1.6(l_r or S) + 0.5L
Headers, girders, joists, interior load-bearing walls and columns, footings (gravity loads)	D + L + 0.3 (L_r + S) D + (L_r or S) + 0.3 L	1.2D + 1.6L^2 + 0.5(L_r + S) 1.2D + 1.6(l_r or S) + 0.5L
Exterior load-bearing walls and columns (gravity and transverse lateral load)	Same as immediately above plus D + W D + 0.7E + 0.5L + 0.2S	Same as immediately above plus 1.2D + 1.5W 1.2D + 1.0E + 0.5L + 0.25
Roof rafters, trusses, and beams: roof and wall sheathing (gravity and wind loads)	D + (L_r or S) 0.6D + W_u D + W	1.2D + 1.6(L_r or S) 0.9D + 1.5W_u 1.2D + 1.5W
Floor diaphragms and shear walls (in-place lateral and overturning loads)	0.6D + (W or 0.7E)	0.9D + (1.5W or 1.0E)

Notes:

The load combinations and factors are intended to apply to nominal design loads defined as follows: D = estimated mean dead weight of the construction; H = design lateral pressure for soil condition/type; L = design floor live load; L_r = maximum roof live load anticipated from construction/maintenance; W = design wind load; S = design roof snow load; and E = design earthquake load. The design or nominal loads should be determined in accordance with this chapter.

Attic loads may be included in the floor live load, a 10 psf attic load is typically used only to size ceiling joists adequately for access purposes. If the attic is intended for storage, the attic live load (or some portion) should also be considered for the design of other elements in the load path.

The transverse wind load for stud design is based on a localized component and cladding wind pressure; D + W provides an adequate and simple design check representative of worst-case combined axial and transverse loading. Axial forces from snow loads and roof live loads should usually not be considered simultaneously with an extreme wind load because they are mutually exclusive on residential sloped roofs. Further, in most areas of the United States, design winds are produced by either hurricanes or thunderstorms; therefore, these wind events and snow are mutually exclusive because they occur at different times of the year.

For walls supporting heavy cladding loads (such as brick veneer), an analysis of earthquake lateral loads and combined axial loads should be considered. However, this load combination rarely governs the design of light-frame construction.

W_u is wind uplift load from negative (i.e., suction) pressures on the roof. Wind uplift loads must be resisted by continuous load path connections to the foundation or until offset by 0.6D.

The 0.6 reduction factor on D is intended to apply to the calculation of net overturning stresses and forces. For wind, the analysis of overturning should also consider roof uplift forces unless a separate load path is designed to transfer those forces.

1.3 Dead Loads

Dead loads are made up of the permanent construction material loads composing the roof, floor, wall, and foundation systems, including claddings, finishes, and fixed equipment. The values for dead loads in Table 1.2 are for commonly used materials and construction in light-frame residential buildings. Table 1.3 provides values for common material densities and may be useful to calculate dead loads more accurately. The design examples in this course will demonstrate a straightforward process of calculating dead loads.

TABLE 1.2 Dead Loads for Common Residential Construction

Roof Construction			
Light-frame wood roof with wood structural panel			15 psf
sheathing and 1/2-inch gypsum board ceiling (2 psf) with asphalt shingle roofing (3 psf)			27 psf
- with conventional clay/tile roofing			21 psf
- with light-weight tile			14 psf
- with metal roofing			15 psf
- with wood shakes			18 psf
- with tar and gravel			
Floor Construction			
Light-frame 2x12 wood floor with 3/4-inch wood structural panel sheathing and 1/2-inch gypsum board ceiling (without 1/2-inch gypsum board, subtract 2 psf from all values)			10 psf[2]
with carpet, vinyl, or similar floor covering			
- with wood flooring			12 psf
- with ceramic tile			15 psf
- with slate			19 psf
Wall Construction			
Light-frame 2x4 wood wall with 1/2-inch wood structural panel sheathing and 1/2-inch gypsum board finish (for 2x6, add 1 psf to all values)			6 psf
- with vinyl or aluminum siding			7 psf
- with lap wood siding			8 psf
- with 7/8-inch portland cement stucco siding			15 psf
- with thin-coat-stucco on insulation board			9 psf
- with 3-1/2-inch brick veneer			45 psf
Interior partition walls (2x4 with 1/2-inch gypsum board applied to both sides)			6 psf
Foundation Construction	Masonry Concrete		
	Hollow	Solid or Full Grout	
6-inch-thick wall	28 psf	60 psf	75 psf
8-inch-thick wall	36 psf	80 psf	100 psf
10-inch-thick wall	44 psf	100 psf	123 psf
12-inch-thick wall	50 psf	125 psf	145 psf
6-inch x 12-inch concrete footing			73 plf
6-inch x 16-inch concrete footing			97 plf
8-inch x 24-inch concrete footing			193 plf

Notes:
For unit conversions, see Appendix A.
Value also used for roof rafter construction (i.e., cathedral ceiling).
For partially grouted masonry, interpolate between hollow and solid grout in accordance with the fraction of masonry cores that are grouted.

TABLE 1.3 Densities for Common Residential Construction Materials

Aluminum	170 pcf
Copper	556 pcf
Steel	492 pcf
Concrete (normal weight with light reinforcement)	145–150 pcf
Masonry, grout	140 pcf
Masonry, brick	100–130 pcf
Masonry, concrete	85–135 pcf
Glass	160 pcf
Wood (approximately 10 percent moisture content)	
- spruce-pine-fir (G = 0.42)	29 pcf
- spruce-pine-fir, south (G = 0.36)	25 pcf
- southern yellow pine (G = 0.55)	38 pcf
- Douglas fir–larch (G = 0.5)	34 pcf
- hem-fir (G = 0.43)	30 pcf
- mixed oak (G = 0.68)	47 pcf
Water	62.4 pcf
Structural wood panels	
- plywood	36 pcf
- oriented strand board	36 pcf
Gypsum board	48 pcf
Stone	
- Granite	96 pcf
- Sandstone	82 pcf
Sand, dry	90 pcf
Gravel, dry	105 pcf

Notes:
For unit conversions, see Appendix A.
The equilibrium moisture content of lumber is usually not more than 10 percent in protected building construction. The specific gravity, G, is the decimal fraction of dry wood density relative to that of water. Therefore, at a 10 percent moisture content, the density of wood is 1.1(G)(62.4 lbs/ft^3). The values given are representative of average densities and may easily vary by as much as 15 percent depending on lumber grade and other factors.

1.4 Live Loads

Live loads are created by the use and occupancy of a building. Loads include human occupants, furnishings, moveable equipment, storage, and construction and maintenance activities. Table 1.4 provides recommended design live loads for residential buildings. Example 1.1 will demonstrate the use of those loads and the load combinations specified in Table 1.1, along with other factors discussed here. To adequately define the loading condition, loads are presented in terms of uniform area loads (psf), concentrated loads (lbs), and uniform line loads (plf). The uniform and concentrated live loads should not be applied simultaneously in a structural evaluation. Concentrated loads should be applied to a small area or surface consistent with the application and should be located or directed to give the maximum load effect possible in end-use conditions. For example, the stair concentrated load of 300 pounds should be applied to the center of the stair tread between supports. The concentrated wheel load of a vehicle on a garage slab or floor should be applied to all areas or members subject to a wheel load, using a loaded area of about 20 square inches.

TABLE 1.4 Live Loads for Residential Construction

Application	Uniform Load	Concentrated Load
Roof		
Slope ≥ 4:12	15 psf	250 lbs
Flat to 4:12 slope	20 psf	250 lbs
Attic		
With limited storage	10 psf	250 lbs
With storage	20 psf	250 lbs
Floors		
Bedroom areas	30 psf	300 lbs
Other areas	40 psf	300 lbs
Garages	50 psf	2,000 lbs (vans, light tucks) 1,500 lbs (passenger cars)
Decks	40 psf	300 lbs
Balconies	60 psf	300 lbs
Stairs	40 psf	300 lbs
Guards and handrails	20 plf	200 lbs
Grab bars	N/A	250 lbs

Notes:

Live load values should be verified relative to the locally applicable building code.

Roof live loads are intended to provide a minimum load for roof design in consideration of maintenance and construction activities. They should not be considered in combination with other transient loads (i.e., floor live load, wind load, etc.) when designing walls, floors, and foundations. A 15 psf roof live load is recommended for residential roof slopes greater than 4:12.

Loft sleeping and attic storage loads should be considered only in areas with a clear height greater than about 3 feet. The concept of a "clear height" limitation on live loads is logical, but it may not be universally recognized.

Some codes require 40 psf for all floor areas.

The floor live load on any given floor area may be reduced in accordance with Equation 14.1. The equation applies to floor and support members, such as beams or columns that experience floor loads from a total tributary floor area greater than 200 square feet. This equation is different from what is found in most engineering manual since it is based on data that applies to residential floor loads rather than commercial buildings.

Equation 1.4.1

$$L = L_o \left[0.25 + \frac{10.6}{\sqrt{A_t}} \right] \geq 0.75$$

where,

L = the adjustment floor live load for tributary areas greater than 200 square feet
A_t = the tributary from a single-story area assigned to a floor support member (i.e., girder, column, or footing)
L_o = the unreduced live load associated with a floor area of 200 ft^2 from Table 1.4

The nominal design floor live load in Table 1.4 includes both a sustained and transient load component. The sustained component is that load typically present at any given time and includes the load associated with normal human occupancy and furnishings. For residential buildings, the mean sustained live load is about 6 psf and can very from 4 to 8 psf. The mean transient live load for dwellings is also about 6 psf but could very to a high of 13 psf. A total design live load of 30 to 40 psf is conservative.

1.5 Soil Lateral Loads

Lateral pressure exerted by the earth backfill against a residential foundation wall (basement wall) can be calculated with reasonable accuracy on the basis of theory and for conditions that rarely occur in practice. Theoretical analyses are usually based on homogeneous materials that demonstrate consistent compaction and behavioral properties. These conditions are rarely experienced in residential construction projects. The most common method of determining lateral soil loads on residential foundations is the Rankine's (1857) theory of earth pressure and uses the Equivalent Fluid Density (EFD) method shown in Figure 1.1, where pressure distribution is assumed to be triangular and increases with depth. In the EFD method, the soil unit weight W is multiplied by an empirical coefficient Ka to account for soil not actually being fluid and that the pressure distribution is not necessarily triangular. The coefficient Ka is known as the active Rankine pressure coefficient. Thus, the equivalent fluid density (EFD) is determined as follows:

Equation 1.5.1

$$q = K_a w$$

Figure 1.1, Triangular Pressure Distribution on a Basement Foundation Wall

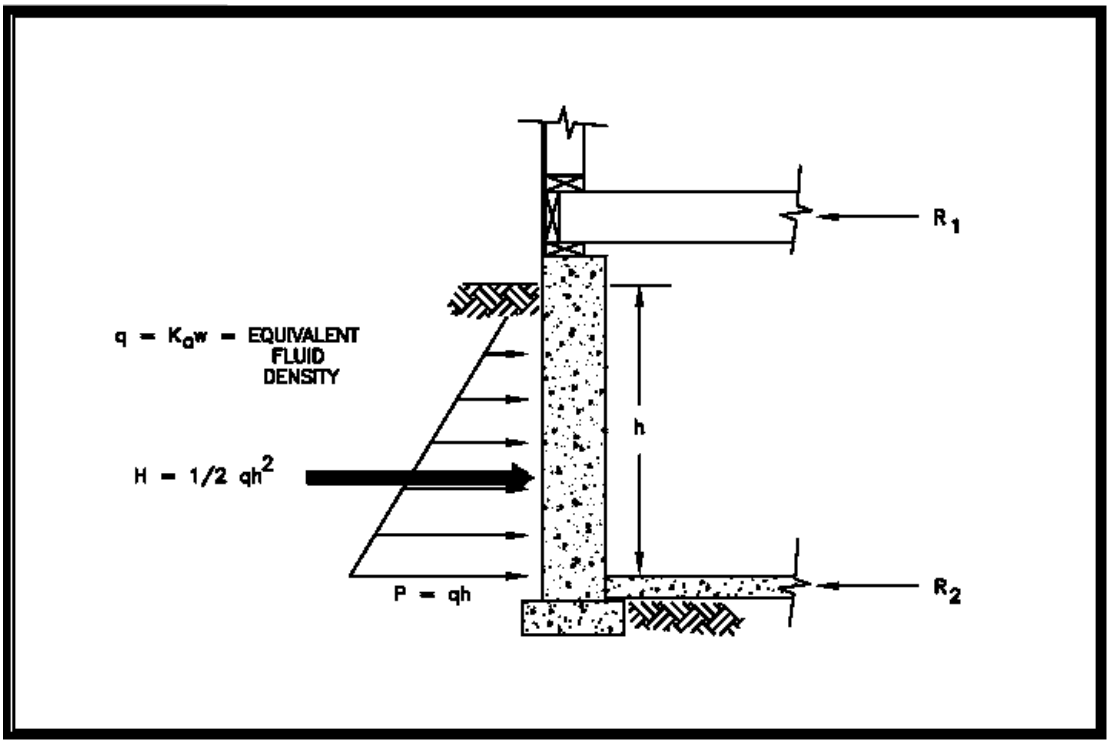

For the triangular pressure distribution shown in Figure 1.1, the pressure at depth, h, in feet is

Equation 1.5.2

$$P = qh$$

The total active soil force (pounds per lineal foot of wall length) is

Equation 1.5.3

$$H = \frac{1}{2}(qh)(h) = \frac{1}{2}qh^2$$

where,

h = the depth of the unbalanced fill on a foundation wall
H = the resultant force (plf) applied at a height of h/3 from the base of the unbalanced fill since the pressure distribution is assumed to be triangular

The EFD method is subject to judgment as to the appropriate value of the coefficient Ka. The values of Ka in Table 1.5 are recommended for the determination of lateral pressures on residential foundations for various types of backfill materials placed with light compaction and good drainage. Given the long time use of a 30 pcf equivalent fluid density in residential foundation wall prescriptive design tables, the values in Table 1.5 are considered somewhat conservative for typical conditions. A relatively conservative safety factor of 3 to 4 is typically applied to the design of unreinforced or nominally reinforced masonry or concrete foundation walls. Therefore, at imminent failure of a foundation wall, the 30 psf design EFD would correspond to an active soil lateral pressure determined by using an equivalent fluid density of about 90 to 120 pcf or more.

TABLE 1.5 Values of Ka , Soil Unit Weight, and Equivalent Fluid Density by Soil Type

Type of Soil (unified soil classification)	Active Pressure Coefficient (K_a)	Soil Unit Weight (pcf)	Equivalent Fluid Density (pcf)
Sand or gravel (GW, GP, GM, SW, SP)	0.26	115	30
Silty sand, silt, and sandy silt (GC, SM)	0.35	100	35
Clay-silt, silty clay (SM-SC, SC, ML, ML-CL)	0.45	100	45
Clay (CL, MH, CH)	0.6	100	60

Notes:

Values are applicable to well-drained foundations with less than 10 feet of backfill placed with light compaction or natural settlement as is common in residential construction. The values do not apply to foundation walls in flood-prone environments. In such cases, an equivalent fluid density value of 80 to 90 pcf would be more appropriate.

These values do not consider the significantly higher loads that can result from expansive clays and the lateral expansion of moist, frozen soil. Such conditions should be avoided by eliminating expansive clays adjacent to the foundation wall and providing for adequate surface and foundation drainage.

Organic silts and clays and expansive clays are unsuitable for backfill material.

Backfill in the form of clay soils (nonexpansive) should be used with caution on foundation walls with unbalanced fill heights greater than 3 to 4 feet and on cantilevered foundation walls with unbalanced fill heights greater than 2 to 3 feet.

Depending on the type and depth of backfill material and how it is placed, it is common practice in residential construction to allow the backfill soil to consolidate naturally by providing an additional 3” to 6” of fill material. The additional backfill ensures that surface water drains away from the foundation remains adequate (i.e., the grade slopes away from the building). It also helps avoid heavy compaction that could cause undesirable loads on the foundation wall during and after construction. If soils are heavily compacted at the ground surface or compacted in lifts to standard Proctor densities greater than about 85 percent of optimum (ASTM, 1998), the standard 30 pcf EFD assumption may be inadequate. In cases where exterior slabs, patios, stairs, or other items are supported on the backfill, some amount of compaction is required unless the structures are supported on a separate foundation bearing on undisturbed ground.

1.6 Wind Loads

1.6.1 General

Wind is the source of non-static loads on a structure at highly variable magnitudes. The variation in pressures at different locations on a building is very complex that pressures may become too analytically intensive for precise consideration in design. Wind load specifications attempt to simplify the design problem by considering basic static pressure zones on a building representative of peak loads that most likely are to be experienced. The peak pressures in one zone for a given wind direction may not occur simultaneously with peak pressures in other zones. For some pressure zones, the peak pressure depends on a narrow range of wind direction. Therefore, the wind directionality effect must also be factored into determining risk-consistent wind loads on buildings. In fact, most modern wind load specifications take account of wind directionality and other effects in determining nominal design loads in some simplified form. This course provides simplified wind load design specifications to provide an easy and effective approach for designing typical residential buildings.

Because wind loads vary substantially over the surface of a building, they are considered at two different scales. On a large scale loads, the loads produced on the overall building, or major structural systems that sustain wind loads from more than one surface of the building, are considered the main wind force-resisting system (MWFRS). The MWFRS of a home includes the shear walls and diaphragms that create the lateral force-resisting system (LFRS) as well as the structural systems such as trusses that experience loads from two surfaces (or pressure regimes) of the building. The wind loads applied to the

MWFRS account for the large-area averaging effects of time-varying wind pressures on the surface or surfaces of the building.

On a smaller scale, pressures are somewhat greater on localized surface areas of the building, particularly near abrupt changes in building geometry (e.g., eaves, ridges, and corners). These higher wind pressures occur on smaller areas, particularly affecting the loads borne by components and cladding (e.g., sheathing, windows, doors, purlins, studs). The components and cladding (C&C) transfer localized time-varying loads to the MWFRS, at which point the loads average out both spatially and temporally since, at a given time, some components may be at near peak loads while others are at substantially less than peak.

The next section presents a simplified method for determining both MWFRS and C&C wind loads. Since the loads in Section 1.6.2 are determined for specific applications, the calculation of MWFRS and C&C wind loads is implicit in the values provided. Design Example 1.2 demonstrates the calculation of wind loads by applying the simplified method of the following Section 1.6.2 to several design conditions associated with wind loads and the load combinations presented in Table 1.1.

1.6.2 Determination of Wind Loads on Residential Structures

The method for the design of residential buildings in this course is based on a simplification of the ASCE 7-98 wind provisions (ASCE, 1999); however, wind loads listed in ASCE 7-89 are not exact duplicate. Lateral loads and roof uplift loads are determined by using a projected area approach. Other wind loads are determined for specific components or assemblies that comprise the exterior building envelope. Five steps are required to determine design wind loads on a residential building and its components.

Step 1: Determine site design wind speed and basic velocity pressure

From the wind map in Figure 1.2 (refer to ASCE 7 for maps with greater detail), select a design wind speed for the site. The wind speeds may appear higher than those used in older design wind maps. The difference is due solely to the use of the “peak gust” to define wind speeds rather than an averaged wind speed as represented by the “fastest mile of wind” used in older wind maps. Nominal design peak gust wind speeds are typically 85 to 90 mph in most of the United States; however, along the hurricane-prone Gulf and Atlantic coasts, nominal design wind speeds range from 100 to 150 mph for the peak gust.

If relying on either an older fastest-mile wind speed map or older design provisions based on fastest-mile wind speeds, the engineer should convert wind speed in accordance with Table 1.6 for use with this simplified method, which is based on peak gust wind speeds.

TABLE 1.6 Wind Speed Conversions

Fastest mile (mph)	70	75	80	90	100	110	120	130
Peak gust (mph)	85	90	100	110	120	130	140	150

Once the nominal design wind speed in terms of peak gust is determined, the engineer can select the basic velocity pressure in accordance with Table 1.7. The basic velocity pressure is a reference wind pressure to which pressure coefficients are applied to determine surface pressures on a building. Velocity pressures in Table 1.7 are based on typical conditions for residential construction, namely, suburban terrain exposure and relatively flat or rolling terrain without topographic wind speed-up effects.

FIGURE 1.2 Basic Design Wind Speed Map from ASCE 7-98

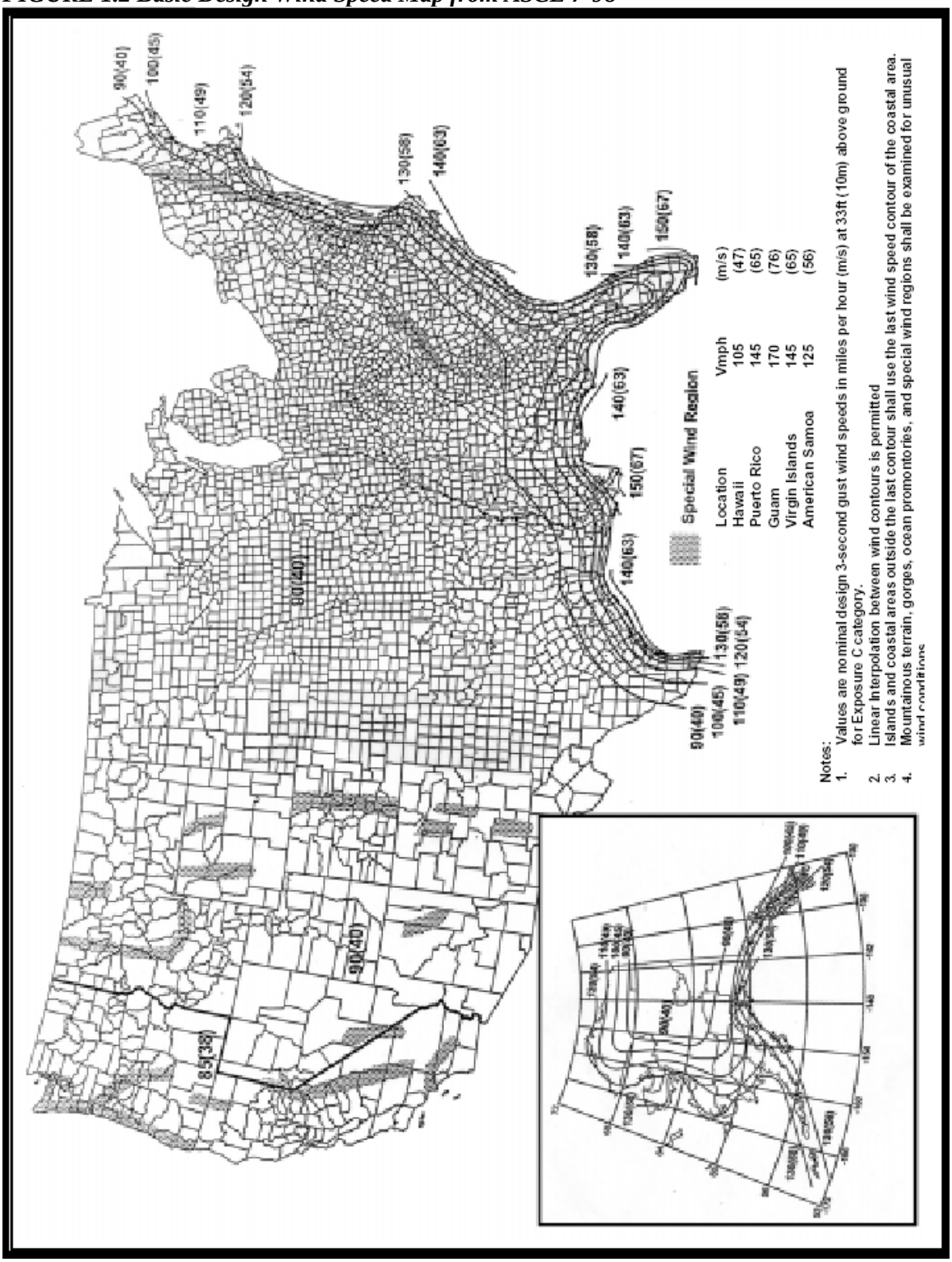

TABLE 1.7 Basic Wind Velocity Pressures (psf) for Suburban Terrain

Design Wind Speed, V (mph, peak gust)	One-Story Building ($K_z = 0.6$)	Two-Story Building ($K_z = 0.67$)	Three-Story Building ($K_z = 0.75$)
85	9.4	10.5	11.8
90	10.6	11.8	13.2
100	13.1	14.6	16.3
110	15.8	17.6	19.7
120	18.8	21.0	23.5
130	22.1	24.6	27.6
140	25.6	28.6	32.0
150	29.4	32.8	36.7

Notes:
Velocity pressure (psf) equals $0.00256\ K_D\ K_Z V^2$, where K_Z is the velocity pressure exposure coefficient associated with the vertical wind speed profile in suburban terrain at the mean roof height of the building. K_D is the wind directionality factor with a default value of 0.85. These two K_z factors are adjusted based on a recent study of the near-ground wind profile (NAHBRC, 1999).
A minimum K_z of 0.7 should be applied to determine velocity pressure for one-and two-story buildings in exposure B (suburban terrain) for the design of components and cladding only. For exposure C, the values require no adjustment except that all tabulated values must be multiplied by 1.4 as described in Step 2.

Step 2: Adjustments to the basic velocity pressure

If appropriate, the basic velocity pressure from Step 1 should be adjusted in accordance with the factors below. The adjustments are cumulative.

Open exposure. The wind values in Table 1.7 are based on typical residential exposures to the wind. If a site is located in generally open, flat terrain with few obstructions to the wind in most directions or is exposed to a large body of water (i.e., ocean or lake), the designer should multiply the values in Table 1.7 by a factor of 1.4. The factor may be adjusted for sites that are considered intermediate to open suburban exposures. It may also be used to adjust wind loads according to the exposure related to the specific directions of wind approach to the building. The wind exposure conditions used in this guide are derived from ASCE 7 with some modification applicable to small residential buildings of three stories or less.

- Open terrain. Open areas with widely scattered obstructions, including shoreline exposures along coastal and non-coastal bodies of water.
- Suburban terrain. Suburban areas or other terrain with closely spaced obstructions that are the size of single-family dwellings or larger and extend in the upwind direction a distance no less than ten times the height of the building.

Protected exposure. If a site is generally surrounded by forest or densely wooded terrain with no open areas greater than a few hundred feet, smaller buildings such as homes experience significant wind load reductions from the typical suburban exposure condition assumed in Table 1.7. If such conditions exist and the site's design wind speed does not exceed about 120 mph peak gust, the engineer may consider multiplying the values in Table 1.7 by 0.8. The factor may be used to adjust wind loads according to the exposure related to the specific directions of wind approach to the building. Wind load reductions associated with a protected exposure in a suburban or otherwise open exposure have been shown to approximate 20 percent. In densely treed terrain with the height of the building below that of the treetops, the reduction factor applied to Table 1.7 values can approach 0.6. The effect is known as shielding; however, ASCE 7 does not currently permit it. Two considerations require judgment: Are the sources of shielding likely to exist for the expected life of the structure? Are the sources of shielding able to withstand wind speeds in excess of a design event?

Wind directionality. As noted, the direction of the wind in a given event does not create peak loads (which provide the basis for design pressure coefficients) simultaneously on all building surfaces. In some cases, the pressure zones with the highest design pressures are extremely sensitive to wind direction. In accordance with ASCE 7, the velocity pressures in Table 1.7 are based on a directionality adjustment of 0.85 that applies to hurricane wind conditions where winds in a given event are multidirectional but with varying magnitude. However, in "straight" wind climates, a directionality factor of 0.75 has been shown to be appropriate. Therefore, if a site is in a nonhurricane-prone wind area (i.e., design wind speed of 110 mph gust or less), the engineer may also consider multiplying the values in Table 1.7 by 0.9 (i.e., 0.9 x 0.85 ≅ 0.75) to adjust for directionality effects in non-hurricane-prone wind environments.

Topographic effects. If topographic wind speed-up effects are likely because a structure is located near the crest of a protruding hill or cliff, the engineer should consider using the topographic factor provided in ASCE 7. Wind loads can be easily doubled for buildings sited in particularly vulnerable locations relative to topographic features that cause localized wind speed-up for specific wind directions.

Step 3: Determine lateral wind pressure coefficients

Lateral pressure coefficients in Table 1.8 are composite pressure coefficients that combine the effect of positive pressures on the windward face of the building and negative (suction) pressures on the leeward faces of the building. When multiplied by the velocity pressure from Steps 1 and 2, the selected pressure coefficient provides a single wind pressure that is applied to the vertical projected area of the roof and wall as indicated in Table 1.8. The resulting load is then used to design the home's lateral force-resisting system. The lateral wind load must be determined for the two orthogonal directions on the building (i.e., parallel to the ridge and perpendicular to the ridge), using the vertical projected area of the building for each direction. Lateral loads are then assigned to various systems (e.g., shear walls, floor diaphragms, and roof diaphragms) by use of tributary areas.

TABLE 1.8 Lateral Pressure Coefficients for Application to Vertical Projected Areas

Application	Lateral Pressure Coefficients
Roof Vertical Projected Area (by slope)	
Flat	0.0
3/12	0.3
6/12	0.5
≥9/12	0.8
Wall Projected Area	1.2

Step 4: Determine wind pressure coefficients for components and assemblies

The pressure coefficients in Table 1.9 are based on the assumption that the building is enclosed and not subject to higher internal pressures that may result from a windward opening in the building. The use of the values in Table 1.9 greatly simplifies a more detailed methodology described in most engineering manuals; as a result, there is some "rounding" of numbers. With the exception of the roof uplift coefficient, all pressures calculated with the coefficients are intended to be applied to the perpendicular building surface area that is tributary to the element of concern. Thus, the wind load is applied perpendicular to the actual building surface, not to a projected area. The roof uplift pressure coefficient is used to determine a single wind pressure that may be applied to a horizontal projected area of the roof to determine roof tie-down connection forces.

For buildings in hurricane-prone regions subject to wind-borne debris, the GCp values in Table 1.9 must be increased in magnitude by ±0.35 to account for higher potential internal pressures due to the possibility of a windward wall opening (i.e., broken window).

Step 5: Determine design wind pressures

Once the basic velocity pressure is determined in Step 1 and adjusted in Step 2 for exposure and other site-specific considerations, the engineer can calculate the design wind pressures by multiplying the adjusted basic velocity pressure by the pressure coefficients selected in Steps 3 and 4. The lateral pressures based on coefficients from Step 3 are applied to the tributary areas of the lateral force-resisting systems such as shear walls and diaphragms. The pressures based on coefficients from Step 4 are applied to tributary areas of members such as studs, rafters, trusses, and sheathing to determine stresses and connection forces.

TABLE 1-9 Wind Pressure Coefficients for Systems and Components (enclosed building)

Application	Pressure Coefficients (GC_p)[2]
Roof	
Trusses, roof beams, ridge and hip/valley rafters	-0.9, +0.4
Rafters and truss panel members	-1.2, +0.7
Roof sheathing	-2.2, +1.0
Skylights and glazing	-1.2, +1.0
Roof uplift	
- hip roof with slope between 3/12 and 6/12	-0.9
- hip roof with slope greater than 6/12	-0.8
- all other roof types and slopes	-1.0
Windward overhang	+0.8
Wall	
All framing members	-1.2, +1.1
Wall sheathing	-1.3, +1.2
Windows, doors, and glazing	-1.3, +1.2
Garage doors	-1.1, +1.0
Air-permeable claddings	-0.9, 0.8

Notes:

All coefficients include internal pressure in accordance with the assumption of an enclosed building. With the exception of the categories labeled trusses, roof beams, ridge and hip/valley rafters, and roof uplift, which are based on MWFRS loads, all coefficients are based on component with cladding wind loads.

Positive and negative signs represent pressures acting inwardly and outwardly, respectively, from the building surface. A negative pressure is a suction or vacuum. Both pressure conditions should be considered to determine the controlling design criteria.

The roof uplift pressure coefficient is used to determine uplift pressures that are applied to the horizontal projected area of the roof for the purpose of determining uplift tie-down forces. Additional uplift force on roof tie-downs due to roof overhangs should also be included. The uplift force must be transferred to the foundation or to a point where it is adequately resisted by the dead load of the building and the capacity of conventional framing connections.

The windward overhang pressure coefficient is applied to the underside of a windward roof overhang and acts upwardly on the bottom surface of the roof overhang. If the bottom surface of the roof overhang is the roof sheathing or the soffit is not covered with a structural material on its underside, then the overhang pressure shall be considered additive to the roof sheathing pressure.

Air-permeable claddings allow for pressure relief such that the cladding experiences about two-thirds of the pressure differential experienced across the wall assembly. Products that experience reduced pressure include lap-type sidings such as wood, vinyl, aluminum, and other similar sidings. Since these components are usually considered "nonessential," it may be practical to multiply the calculated wind load on any nonstructural cladding by 0.75 to adjust for a serviceability wind load.

Such an adjustment would also be applicable to deflection checks, if required, for other components listed in the table. However, a serviceability load criterion is not included or clearly defined in existing design codes.

1.6.3 Special Considerations in Hurricane-Prone Environments

1.6.3.1 Wind-Borne Debris

The wind loads determined in the previous section assume an enclosed building. If glazing in windows and doors is not protected from wind-borne debris or otherwise designed to resist potential impacts during a major hurricane, a building is more susceptible to structural damage owing to higher internal building pressures that may develop with a windward opening. The potential for water damage to building contents also increases. Openings formed in the building envelope during a major hurricane or

tornados are often related to unprotected glazing, improperly fastened sheathing, or weak garage doors and their attachment to the building. Section 3.9 briefly discusses tornado design conditions.

Recent years have focused much attention on wind-borne debris but with comparatively little scientific direction and poorly defined goals with respect to safety (i.e., acceptable risk), property protection, missile types, and reasonable impact criteria. Conventional practice in residential construction has called for simple plywood window coverings with attachments to resist the design wind loads. In some cases, homeowners elect to use impact-resistant glazing or shutters. Regardless of the chosen method and its cost, the responsibility for protection against wind-borne debris has traditionally rested with the homeowner. However, wind-borne debris protection has recently been mandated in some local building codes.

Just what defines impact resistance and the level of impact risk during a hurricane has been the subject of much debate. Surveys of damage following major hurricanes have identified several factors that affect the level of debris impact risk, including

- wind climate (design wind speed);
- exposure (e.g., suburban, wooded, height of surrounding buildings);
- development density (i.e., distance between buildings);
- construction characteristics (e.g., type of roofing, degree of wind resistance); and
- debris sources (e.g., roofing, fencing, gravel, etc.).

Current standards for selecting impact criteria for wind-borne debris protection do not explicitly consider all of the above factors. Further, the primary debris source in typical residential developments is asphalt roof shingles, which are not represented in existing impact test methods. These factors can have a dramatic effect on the level of wind-borne debris risk; moreover, existing impact test criteria appear to take a worst-case approach. Table 1.10 presents an example of missile types used for current impact tests. Additional factors to consider include emergency egress or access in the event of fire when impact-resistant glazing or fixed shutter systems are specified, potential injury or misapplication during installation of temporary methods of window protection, and durability of protective devices and connection details (including installation quality) such that they themselves do not become a debris hazard over time.

TABLE 1.10 Missile Types for Wind-Borne Debris Impact Tests

Description	Velocity	Energy
2-gram steel balls	130 fps	10 ft-lb
4.5-lb 2x4	40 fps	100 ft-lb
9.0-lb 2x4	50 fps	350 ft-lb

Notes:

These missile types are not necessarily representative of the predominant types or sources of debris at any particular site. Steel balls are intended to represent small gravels that would be commonly used for roof ballast. The 2x4 missiles are intended to represent a direct, end-on blow from construction debris without consideration of the probability of such an impact over the life of a particular structure.

Wind-borne debris regions are areas within hurricane-prone regions that are located (1) within one mile of the coastal mean high water line where the basic wind speed is equal to or greater than 110 mph or in Hawaii or (2) where the basic wind speed is equal to or greater than 120 mph. As outlined in Section 1.6.2 higher internal pressures are to be considered for buildings in wind-borne debris regions unless glazed openings are protected by impact-resistant glazing or protective devices proven as such by an approved test method. Approved test methods include ASTM E1886 and SSTD 12-97 (ASTM, 1997; SBCCI, 1997).

The wind load method described in Section 1.6.2 may be considered acceptable without wind-borne debris protection, provided that the building envelope (i.e., windows, doors, sheathing, and

especially garage doors) is carefully designed for the required pressures. Most homes that experience windborne debris damage do not appear to exhibit more catastrophic failures, such as a roof blow-off, unless the roof was severely under designed in the first place (i.e., inadequate tie-down) or subject to poor workmanship (i.e., missing fasteners at critical locations). Those cases are often the ones cited as evidence of internal pressure in anecdotal field studies. Garage doors that fail due to wind pressure more frequently precipitate additional damage related to internal pressure. Because of these internal pressures, in hurricane regions, garage door reinforcement or pressure rated garage doors should be specified and their attachment to structural framing carefully considered.

1.6.3.2 Building Durability

Roof overhangs increase uplift loads on roof tie-downs and the framing members that support the overhangs. They provide a reliable means of protection against moisture and the potential decay of wood building materials. The engineer should consider the trade-off between wind load and durability, particularly in the moist, humid climate zones associated with hurricanes.

For buildings that are exposed to salt spray or mist from nearby bodies of salt water, the engineer should also consider a higher-than-standard level of corrosion resistance for exposed fasteners and hardware. Truss plates near roof vents have shown accelerated rates of corrosion in severe coastal exposures. The engineer should advise the building owner to consider a building maintenance plan that includes regular inspections, maintenance, and repair.

1.6.3.3 Tips to Improve Performance

The following design and construction tips are simple options for reducing a building's vulnerability to hurricane damage:

- One-story buildings are much less vulnerable to wind damage than two- or three-story buildings.
- On average, hip roofs have demonstrated better performance than gable-end roofs.
- Moderate roof slopes (i.e., 4:12 to 6:12) tend to optimize the trade-off between lateral loads and roof uplift loads (i.e., more aerodynamically efficient).
- Roof sheathing installation should be inspected for the proper type and spacing of fasteners, particularly at connections to gable-end framing.
- The installation of metal strapping or other tie-down hardware should be inspected as required to ensure the transfer of uplift loads.
- If composition roof shingles are used, high-wind fastening requirements should be followed (i.e., 6 nails per shingle in lieu of the standard 4 nails). A similar concern exists for tile roofing, metal roofing, and other roofing materials.
- Consider some practical means of glazed opening protection in the most severe hurricane-prone areas.

1.7 Snow Loads

Within the design process, snow is treated as a simple uniform gravity load on the horizontal projected area of a roof. The uniformly distributed design snow load on residential roofs can be easily determined by using the unadjusted ground snow load. This simple approach represents standard practice in some regions of the United States; however, it does not account for a reduction in roof snow load that may be associated with steep roof slopes with slippery surfaces (refer to ASCE 7). To consider drift loads on sloped gable or hip roofs, the design roof snow load on the windward and leeward roof surfaces may be determined by multiplying the ground snow load by 0.8 and 1.2 respectively. The drifted side of the roof may have a 50% greater snow load than the non-drifted side of the roof. However, the average roof snow load is still equivalent to the ground snow load.

Design ground snow loads may be obtained from the map in Figure 1.3; however, snow loads are most likely defined by the local building department. Typical ground snow loads range from 0 psf in the

South to 50 psf in the northern United States. In mountainous areas, the ground snow load can surpass 100 psf. Local snow data should be carefully considered by the engineer. In areas where the ground snow load is less than 15 psf, the minimum roof live load (see to section 1.4) is usually the controlling gravity load in roof design. For a larger map with greater detail, refer to ASCE 7.

FIGURE 1.3 Ground Snow Loads (ASCE 7-98)

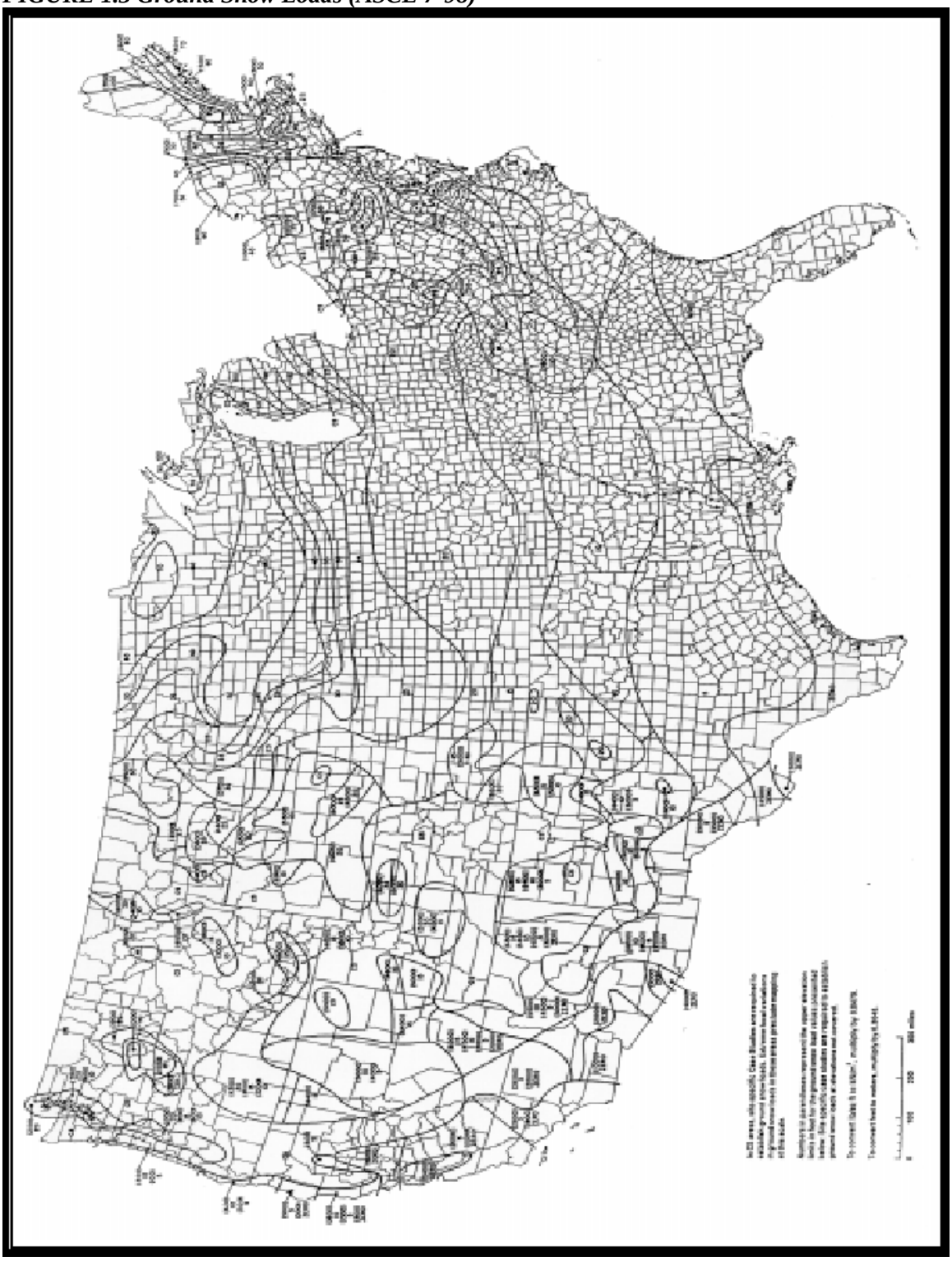

1.8 Earthquake Loads

1.8.1 General

This section provides a simplified earthquake load analysis procedure appropriate for use in residential light-frame construction of not more than three stories above grade. The lateral forces associated with seismic ground motion are based on fundamental Newtonian mechanics (F = ma) expressed in terms of an equivalent static load. The method provided in this section is a simplification of the seismic design provisions found in NEHRP, 1997a and b. It is also similar to a simplified approach found in the ICC.

Most residential designs use a simplified approach similar to that in older seismic design codes. The approach outlined in the next section follows the older approach in terms of its simplicity while using the newer seismic risk maps and design format of NEHRP as incorporated into recent building code development efforts (ICC); see Figure 1.4. It should be noted, however, that the newer maps are not without controversy relative to seismic risk predictions, particularly in the eastern United States. For example, the maps are considered to overstate significantly the risk of earthquakes in the New Madrid seismic region around St. Louis, MO. Based on research and the manner of deriving the NEHRP maps for the New Madrid seismic region, the design seismic loads may be conservative by a factor of 2 or more. The engineer should bear in mind these uncertainties in the design process.

Wood-framed residential structures have performed well in major seismic events due to there their light-weight and resilient construction, the strength provided by nonstructural systems such as interior walls, and their load distribution capabilities. Only in the case of gross absence of good engineering judgment or misapplication of design for earthquake forces have severe life-safety consequences become an issue in light-frame, low-rise structures experiencing extreme seismic events.

FIGURE 1.4 Seismic Map of Design Short-Period Spectral Response Acceleration (g) (2 percent chance of exceeding a 50 year or 2,475-year return period)

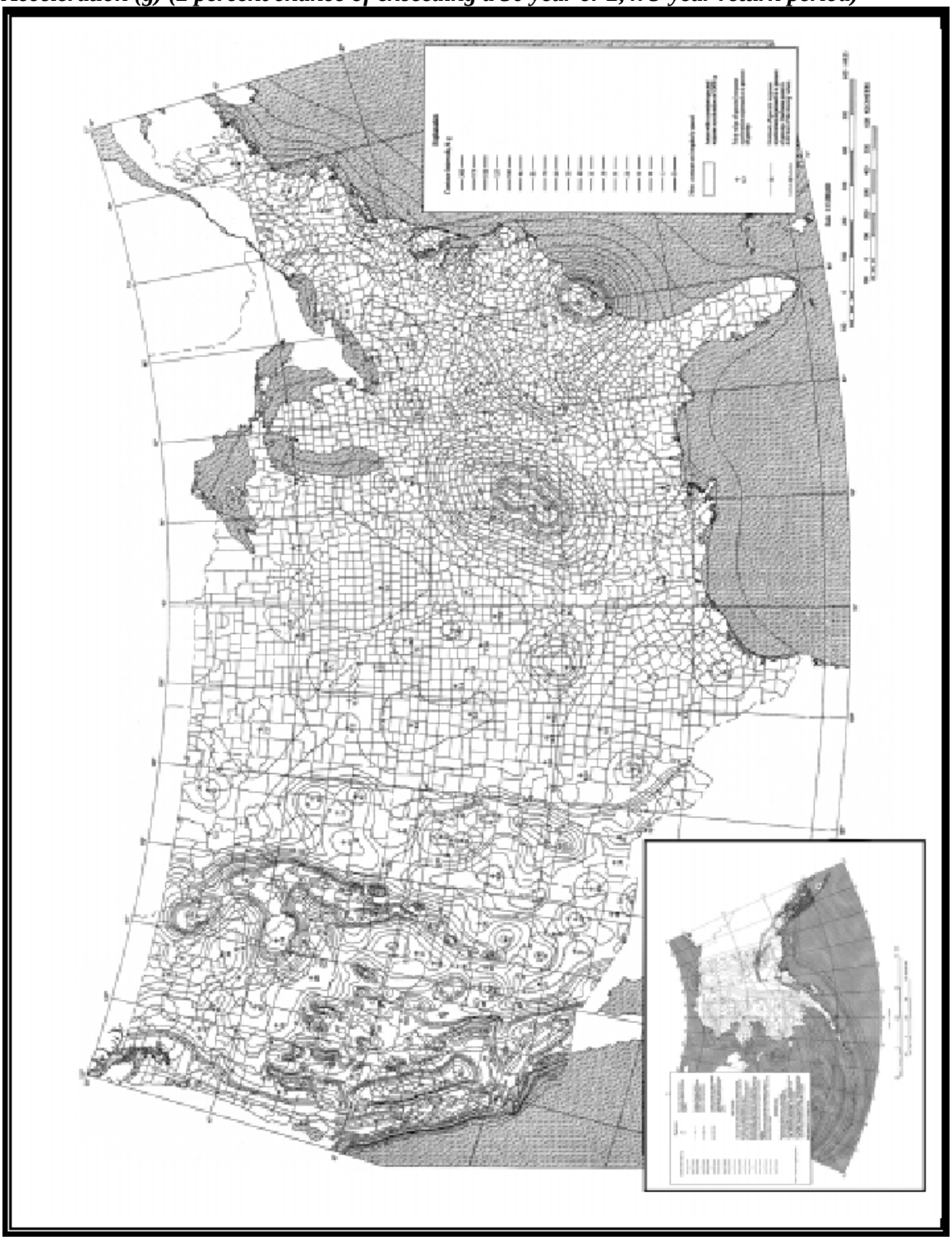

1.8.2 Determination of Earthquake Loads on Houses

Total lateral force at the base of a building are called seismic base shear. The lateral force experienced at a particular story level is called the story shear. The story shear is greatest in the ground story and least in the top story. Seismic base shear and story shear (V) are determined in accordance with the following equation:

Equation 1.8.1

$$V = \frac{1.2\, S_{DS}}{R} W$$

where,

SDS = the design spectral response acceleration in the short-period range determined by Equation 1.8.2 (g)
R = the response modification factor (dimensionless)
W = the total weight of the building or supported by the story under consideration (lb); 20 percent of the roof snow load is also included where the ground snow load exceeds 30 psf
1.2 = factor to increase the seismic shear load based on the belief that the simplified method may result in greater uncertainty in the estimated seismic load

In calculating story shear for a given story, the engineer will apply to that story one-half of the dead load of the walls on the story under consideration and the dead load supported by the story. Dead loads used in determining seismic story shear or base shear are found in section 1.3. For housing, the interior partition wall dead load is effectively accounted for by the use of a 6 psf load distributed uniformly over the floor area. When applicable, the snow load may be determined in accordance with section 1.7. The inclusion of any snow load is based on the assumption that the snow is always frozen and adhered to the building such that it is part of the building mass during the entire seismic event.

The design spectral response acceleration for short-period ground motion SDS is used since light-frame buildings such as houses have a short period of vibration in response to seismic ground motion (i.e., high natural frequency). Nondestructive tests of existing houses have confirmed the short period of vibration, although once ductile damage has begun to occur in a severe event, the natural period of the building will increase. There are no valid methods available to determine the natural period of vibration for use in the seismic design of light-frame houses. Therefore, the short-period ground motion is used in the interest of following traditional practice.

Values of Ss are obtained from Figure 1.7. The value of SDS should be determined in consideration of the mapped short-period spectral response acceleration Ss and the required soil site amplification factor Fa as follows:

Equation 1.8.2

$$S_{DS} = 2/3(S_s)(F_a)$$

The value of Ss ranges from practically zero in low-risk areas to 3g in the highest-risk regions of the United States. A typical value in high seismic areas is 1.5g. It is to be noted that, wind loads control the design of the lateral force-resisting system of light-frame houses when Ss is less than about 1g. The 2/3 coefficient in Equation 1.8.2 is used to adjust to a design seismic ground motion value from that represented by the mapped Ss values (i.e., the mapped values are based on a “maximum considered

earthquake" generally representative of a 2,475-year return period, with the design basis intended to represent a 475-year return period event).

Table 1.11 provides the values of Fa for a standard "firm" soil condition used for the design of residential buildings. Fa will decrease with increasing ground motion because the soil begins to dampen the ground motion as shaking intensifies. Because of this, the soil can have a moderating effect on the seismic shear loads experienced by buildings in high seismic risk regions. Dampening will also occur between a building foundation and the soil and will have a moderating effect. However, the soil-structure interaction effects on residential buildings have had little study; therefore, precise design procedures have not been developed. If a site is located on fill soils or "soft" ground, a different value of Fa should be considered. It has been learned, through experience, that soft soils do not affect the performance of the above ground house structure as much as they affect the site and foundations (e.g., settlement, fissuring, liquefaction, etc.).

TABLE 1.11 Site Soil Amplification Factor Relative to Acceleration (short period, firm soil)

S_s	$\leq 0.25g$	0.5g	0.75g	1.0g	$\geq 1.25g$
F_a	1.6	1.4	1.2	1.1	1.0

The seismic response modifier R has a long history in seismic design, but with little in the way of scientific underpinnings. In recognition that buildings can effectively dissipate energy from seismic ground motions through ductile damage, the R factor was developed to adjust the shear forces from that which would be experienced if a building could exhibit perfectly elastic behavior without some form of ductile energy dissipation. This has served a major role in standardizing the seismic design of buildings even though it has come about in the absence of a repeatable and generalized evaluation methodology with a known relationship to actual building performance.

Those structural building systems that are able to withstand greater ductile damage and deformation without substantial loss of strength are assigned a higher value for R. The R factor also incorporates differences in dampening that occur for various structural systems. Table 1.12 provides some values for R that should be used in residential design.

TABLE 1.12 Seismic Response Modifiers for Residential Construction

Structural System	**Seismic Response Modifier, R**
Light-frame shear walls with wood structural panels used as bearing walls	6.0
Light-frame shear walls with board/lath and plaster	2.0
Reinforced concrete shear walls	4.5
Reinforced masonry shear walls	3.5
Plain concrete shear walls	1.5
Plain masonry walls	1.25

Notes:
The R-factors may vary for a given structural system type depending on wall configuration, material selection, and connection detailing, but these considerations are necessarily matters of designer judgment.
The R for light-frame shear walls (steel-framed and wood-framed) with shear panels has been recently revised to 6. Current practice typically uses an R of 5.5 to 6.5 depending on the edition of the local building code.
The wall is reinforced in accordance with concrete design requirements in ACI-318 or ACI-530. Nominally reinforced concrete or masonry that has conventional amounts of vertical reinforcement such as one #5 rebar at openings and at 4 feet on center may use the value for reinforced walls provided the construction is no more than two stories above grade.

Design Example 1.3 demonstrates the calculation of design seismic shear load based on the simplified procedures.

1.8.3 Seismic Shear Force Distribution

The vertical distribution of seismic forces to separate stories on a light-frame building is assumed to be in accordance with the mass supported by each story. Design codes vary in the requirements related to vertical distribution of seismic shear. There is no clear body of evidence to confirm any particular method of vertical seismic force distribution for light-frame buildings. So the engineer must keep with the simplified method given in Section 1.8.2, the approach used in this course reflects what is considered conventional practice. The horizontal distribution of seismic forces to various shear walls on a given story also varies in current practice for light-frame buildings. Several existing approaches to the design of the lateral force-resisting system of light-frame houses address the issue of horizontal force distribution with varying degrees of sophistication. Until methods of vertical and horizontal seismic force distribution are better understood and developed for application to light-frame buildings, the importance of engineering judgment cannot be overstated.

1.8.4 Special Seismic Design Considerations

What is considered the single most important principle in seismic design is to ensure that the structural components and systems are adequately tied together to perform as a structural unit. Underlying this principle are a host of analytic challenges and uncertainties in actually defining what "adequately tied together" means in a repeatable, accurate, and theoretically sound manner.

Seismic building code developments have introduced several factors and provisions that attempt to address various problems or uncertainties in the design process. Unfortunately, these factors appear to introduce as many uncertainties as they address. Codes have tended to become more complicated to apply or understand, perhaps taking away some important basic principles in seismic design that, when understood, would provide guidance in the application of engineering judgment. Many of the problems stem from the use of the seismic response modifier R which is a concept first introduced to seismic design codes some time in the 1950s. Some of the issues and concerns are briefly described below.

Also known as "reserve strength," the concept of over-strength is a realization that a shear resisting system's ultimate capacity is usually significantly higher than required by a design load as a result of intended safety margins. At the same time, the seismic ground motion (load) is reduced by the R factor to account for ductile response of the building system, among other things. The actual forces experienced on various components (i.e. connections) during a design level event can be substantially higher, even though the resisting system may be able to effectively dissipate those forces. Over-strength factors have been included in the newer seismic codes with recommendations to assist in designing components that may experience higher forces than determined otherwise for the building lateral force resisting system using methods similar to Equation 1.8.1. Over-strength factors should not be considered an exact by the engineer and that actual values of over-strength can vary substantially.

The over-strength concept is an attempt to address the principle of balanced design. It strives to ensure that critical components, such as connections, have sufficient capacity so that the overall lateral force-resisting system is able to act in its intended ductile manner and absorb higher-than design forces so that a restraining connection failure is avoided. An exact approach requires near-perfect knowledge about various connections, details, safety margins, and system component response characteristics that are generally not available. However, the concept is extremely important and experienced engineers have exercised this principle through a blend of judgment and rational analysis.

The redundancy factor was postulated to address the reliability of lateral force-resisting systems by encouraging multiple lines of shear resistance in a building. It is now included in some seismic design provisions. Since it appears that redundancy factors have little technical basis and insufficient verification relative to light-frame structures, they are not explicitly addressed in this course. Residential buildings are generally recognized for their inherent redundancies that are systematically overlooked when designating

and defining a lateral force resisting system for the purpose of executing a rational design. However, this principle is important to consider. For example, it would not be wise to rely on one or two shear-resisting components to support a building. In most applications of light-frame construction, even a single shear wall line has several individual segments and numerous connections that resist shear forces. At a minimum, there are two such shear wall lines in either orientation of the building, not to mention interior walls and other nonstructural elements that contribute to the redundancy of typical light-frame homes. Redundancy is an area where exact guidance does not exist, and the engineer must exercise reasonable care in accordance with or in addition to the applicable building code requirements.

Deflection amplification has been used in past and current seismic design codes to adjust the deflection and/or story drift determined by use of the design seismic shear load (as adjusted downward by the R factor) relative to that actually experienced without allowance for modified response (i.e., load not adjusted down by the R factor). For wood-framed shear wall construction, the deflection calculated at the nominal seismic shear load (Equation 1.8.1) is multiplied by a factor of 4. The estimate of deflection or drift of the shear wall (or entire story) based on the design seismic shear load would be increased four-fold. The conditions that lead to this level of deflection amplification and the factors that may affect it in a particular design are not exact (and are not obvious to the engineer). As a result, conservative drift amplification values are usually selected for code purposes. Regardless, deflection or drift calculations are rarely applied in a residential (low-rise) wood-framed building design for the following.

- A methodology is not generally available to predict the drift behavior of light-frame buildings reliably and accurately.
- The current design values used for shear wall design are relatively conservative and are usually assumed to provide adequate stiffness (i.e., limit drift).
- Code required drift limits have not been developed for specific application to light-frame residential construction. Deformation amplification is an area where exact guidance does not exist and predictive tools are unreliable. Therefore, the engineer must exercise reasonable care in accordance with the applicable building code requirements.

Another issue that relates to seismic design provisions is irregularities. Irregularities are related to special geometric or structural conditions that affect the seismic performance of a building and either special design attention or should be altogether avoided. In essence, the presence of limits on structural irregularity speaks indirectly of the inability to predict the performance of a structure in a reliable, self-limiting fashion on the basis of analysis alone. Many of the irregularity limitations are based on engineering judgment from problems experienced in past seismic events.

Irregularities are generally separated into plan and vertical structural irregularities. Plan structural irregularities include torsional imbalances that result in excessive rotation of the building, re-entrant corners creating “wings” of a building, floor or roof diaphragms with large openings or non-uniform stiffness, out-of-plane offsets in the lateral force resistance path, and nonparallel resisting systems. Vertical structural irregularities include stiffness irregularities (i.e., a “soft” story), capacity irregularities (i.e., a “weak” story), weight (mass) irregularity (i.e., a “heavy” story), and geometric discontinuities affecting the interaction of lateral resisting systems on adjacent stories.

The concept of irregularities is associated with ensuring an adequate load path and limiting undesirable (i.e., hard to control or predict) building responses in a seismic event. Again, experienced designers generally understand the effect of irregularities and effectively address or avoid them on a case-by-case basis. For typical single-family housing, all but the most serious irregularities (i.e., “soft story”) are generally of limited consequence, particularly given the apparently significant system behavior of light-frame homes (provided the structure is reasonably “tied together as a structural unit”). For larger structures, such as low and high-rise commercial and residential construction, the issue of irregularity and loads becomes more significant. Given that structural irregularities raise serious concerns and have been associated with building failures or performance problems in past seismic events, the engineer must

exercise reasonable care in addition to applying the requirements of the applicable building code requirements.

A main issue related to building damage involves deformation compatibility of materials and detailing in a constructed system. This issue may be handled through specification of materials that have similar deformation capabilities or by system detailing that improves compatibility. For example, a relatively flexible hold-down device installed near a rigid sill anchor causes greater stress concentration on the more rigid element as evidenced by the splitting of wood sill plates in the Northridge Earthquake. The solution can involve increasing the rigidity of the hold-down device (which can lessen the ductility of the system, increase stiffness, and effectively increase seismic load) or redesigning the sill plate connection to accommodate the hold-down deformation and improve load distribution. As a nonstructural example of deformation compatibility, gypsum board interior finishes crack in a major seismic event well before the structural capability of the wall's structural sheathing is exhausted. Conversely, wood exterior siding and similar resilient finishes tend to deform compatibly with the wall and limit observable or unacceptable visual damage (HUD, 1994). A gypsum board interior finish may be made more resilient and compatible with structural deformations by using resilient metal channels or similar detailing; however, this enhancement has not yet been proven. Unfortunately, there is little definitive design guidance on deformation compatibility considerations in seismic design of wood-framed buildings and other structures.

It should be understood that the general objective of current and past seismic building code provisions has been to prevent collapse in extreme seismic events such that "protection of life is reasonably provided, but not with complete assurance. It is believed that damage can be controlled by use of a smaller R factor or a larger safety factor.

It has also been suggested using a higher design event. Either approach may indirectly reduce damage or improve performance. It does not necessarily improve the predictability of building performance and may have uncertain benefits in many cases. Some practical considerations as discussed above may lead to better performing buildings, at least from the perspective of controlling damage.

1.9 Other Load Conditions

In addition to the loads covered in Sections 1.3 through 1.8 that are typically considered in the design of a home, other "forces of nature" may create loads on buildings. Some examples include

- frost heave;
- expansive soils;
- temperature effects; and
- tornadoes.

In certain cases, forces from these phenomena can drastically exceed reasonable design loads for residential buildings. For example, frost heave forces can easily exceed 10,000 pounds per square foot. Similarly, the force of expanding clay soil can be impressive. In addition, the self-straining stresses induced by temperature-related expansion or contraction of a member or system that is restrained against movement can be very large, although they are not typically a concern in wood-framed housing. Finally, the probability of a direct tornado strike on a given building is much lower than considered practical for engineering and general safety purposes. The unique wind loads produced by an extreme tornado (i.e., F5 on the Fujita scale) may exceed typical design wind loads by almost an order of magnitude in effect. Conversely, most tornadoes have comparatively low wind speeds that can be resisted by attainable design improvements. However, the risk of such an event is still significantly lower than required by minimum accepted safety requirements.

Common practice avoids the above loads by using sound design detailing. For example, frost heave can be avoided by placing footings below a frost depth, building on nonfrost-susceptible materials, or using other frost protection methods. Expansive soil loads can be avoided by isolating building foundations from expansive soil, supporting foundations on a system of deep pilings, and designing foundations that provide for differential ground movements. Temperature effects can be eliminated by providing construction joints that allow for expansion and contraction. While such temperature effects on wood materials are practically negligible, some finishes such as ceramic tile can experience cracking when inadvertently restrained against small movements resulting from variations in temperature. Unfortunately, tornadoes cannot be avoided; therefore, it is not uncommon to consider the additional cost and protection of a tornado shelter in tornado-prone areas. A tornado shelter guide is available from the Federal Emergency Management Agency (FEMA).

As noted earlier, this course does not address loads from flooding, ice, rain, and other exceptional sources. The engineer should refer to other resources for information regarding special load conditions.

Design Examples

EXAMPLE 1.1 Design Gravity Load Calculations and Use of ASD Load Combinations

Given

- Three-story conventional wood-framed home
- 28’ x 44’ plan, clear-span roof, floors supported at mid-span
- Roof dead load = 15 psf (Table 1.2)
- Wall dead load = 8 psf (Table 1.2)
- Floor dead load = 10 psf (Table 1.2)
- Roof snow load = 16 psf (Section 1.7)
- Attic live load = 10 psf (Table 1.4)
- Second- and third-floor live load = 30 psf (Table 1.4)
- First-floor live load = 40 psf (Table 1.4)

Find

1. Gravity load on first-story exterior bearing wall
2. Gravity load on a column supporting loads from two floors

Solution

1. Gravity load on first-story exterior bearing wall

- Determine loads on wall

Dead load = roof DL + 2 wall DL + 2 floor DL
= 1/2 (28 ft)(15 psf) + 2(8 ft)(8 psf) + 2(7 ft)(10 psf)
= 478 plf
Roof snow = 1/2(28 ft)(16 psf) = 224 plf
Live load = (30 psf + 30 psf)(7 ft)= 420 plf (two floors)
Attic live load = (10 psf)(14 ft - 5 ft*)= 90 plf
*edges of roof span not accessible to roof storage due to low clearance

- Apply applicable ASD load combinations (Table 1.1)

(a) D + L + 0.3 (Lr or S)

Wall axial gravity load = 478 plf + 420 plf + 0.3 (224 plf)
= 965 plf*
*equals 1,055 plf if full attic live load allowance is included with L

(b) D + (Lr or S) + 0.3L

Wall axial gravity load = 478 plf + 224 plf + 0.3 (420 plf)
= 828 plf

Load condition (a) controls the gravity load analysis for the bearing wall. The same load applies to the design of headers as well as to the wall studs. Of course, combined lateral (bending) and axial loads on the wall studs also need to be checked (i.e., D+W); refer to Table 1.1 and Example 1.2. For nonload-bearing exterior walls (i.e., gable-end curtain walls), contributions from floor and roof live loads may be negligible (or significantly reduced), and the D+W load combination likely governs the design.

2. Gravity load on a column supporting a center floor girder carrying loads from two floors (first and second stories)

- Assume a column spacing of 16 ft
- Determine loads on column

(a) Dead load = Second floor + first floor + bearing wall supporting second floor
= (14 ft)(16 ft)(10 psf) + (14 ft)(16 ft)(10 psf) + (8 ft)(16 ft)(7 psf)
= 5,376 lbs

(b) Live load area reduction (Equation 1.4.1)

- supported floor area = 2(14 ft)(16 ft) = 448 ft^2 per floor
- reduction $= \left[0.25 + \frac{10.6}{\sqrt{448}}\right] = 0.75 \geq 0.75$ **OK**
- first-floor live load = 0.75 (40 psf) = 30 psf
- second-floor live load = 0.75 (30 psf) = 22.5 psf

(c) Live load = (14 ft)(16 ft)[30 psf + 22.5 psf]
= 11,760 lbs

- Apply ASD load combinations (Table 1.1)

The controlling load combination is D+L since there are no attic or roof loads supported by the column. The total axial gravity design load on the column is 17,136 lbs (5,376 lbs + 11,760 lbs).

Note. If LRFD material design specifications are used, the various loads would be factored in accordance with Table 1.1. All other considerations and calculations remain unchanged.

EXAMPLE 1.2 Design Wind Load Calculations and Use of ASD Load Combinations

Given

- Site wind speed – 100 mph, gust
- Site wind exposure – suburban
- Two-story home, 7:12 roof pitch, 28' x 44' plan (rectangular), gable roof, 12-inch overhang

Find

1. Lateral (shear) load on lower-story end wall
2. Net roof uplift at connections to the side wall
3. Roof sheathing pull-off (suction) pressure
4. Wind load on a roof truss
5. Wind load on a rafter
6. Lateral (out-of-plane) wind load on a wall stud

Solution

1. Lateral (shear) load on lower-story end wall

Step 1: Velocity pressure = 14.6 psf (Table 1.7)
Step 2: Adjusted velocity pressure = 0.9* x 14.6 psf = 13.1 psf
*adjustment for wind directionality (V<110 mph)
Step 3: Lateral roof coefficient = 0.6 (Table 1.8)
Lateral wall coefficient = 1.2 (Table 1.8)
Step 4: Skip
Step 5: Determine design wind pressures
Wall projected area pressure = (13.1 psf)(1.2) = 15.7 psf
Roof projected area pressure = (13.1 psf)(0.6) = 7.9 psf

Now determine vertical projected areas (VPA) for lower-story end-wall tributary loading (assuming no contribution from interior walls in resisting lateral loads)

Roof VPA = [1/2 (building width)(roof pitch)] x [1/2 (building length)]
= [1/2 (28 ft)(7/12)] x [1/2 (44 ft)]
= [8.2 ft] x [22 ft]
= 180 ft^2

Wall VPA = [(second-story wall height) + (thickness of floor) + 1/2 (first story wall height)] x [1/2 (building length)]
= [8 ft + 1 ft + 4 ft] x [1/2 (44 ft)]
= [13 ft] x [22 ft]
= 286 ft^2

Now determine shear load on the first-story end wall

Shear = (roof VPA)(roof projected area pressure) + (wall VPA)(wall projected area pressure)
= (180 ft2)(7.9 psf) + (286 ft2)(15.7 psf)
= 5,912 lbs

The first-story end wall must be designed to transfer a shear load of 5,169 lbs. If side-wall loads were determined instead, the vertical projected area would include only the gable-end wall area and the

triangular wall area formed by the roof. Use of a hip roof would reduce the shear load for the side and end walls.

2. Roof uplift at connection to the side wall (parallel-to-ridge)

Step 1: Velocity pressure = 14.6 psf (as before)
Step 2: Adjusted velocity pressure = 13.1 psf (as before)
Step 3: Skip
Step 4: Roof uplift pressure coefficient = -1.0 (Table 1.9)
Roof overhang pressure coefficient = 0.8 (Table 1.9)
Step 5: Determine design wind pressure
Roof horizontal projected area (HPA) pressure = -1.0 (13.1 psf)
= -13.1 psf
Roof overhang pressure = 0.8 (13.1 psf) = 10.5 psf (upward)

Now determine gross uplift at roof-wall reaction

Gross uplift = 1/2 (roof span)(roof HPA pressure) + (overhang)(overhang pressure coefficient)
= 1/2 (30 ft)(-13.1 psf) + (1 ft)(-10.5 psf)
= -207 plf (upward)

Roof dead load reaction = 1/2 (roof span)(uniform dead load)
= 1/2 (30 ft)(15 psf*)
*Table 1.2
= 225 plf (downward)

Now determine net design uplift load at roof-wall connection

Net design uplift load = 0.6D + Wu (Table 1.1)
= 0.6 (225 plf) + (-207 plf)
= -54 plf (net uplift)

The roof-wall connection must be capable of resisting a design uplift load of 54 plf.
Generally, a toenail connection can be shown to meet the design requirement depending on the nail type, nail size, number of nails, and density of wall framing lumber. At appreciably higher design wind speeds or in more open wind exposure conditions, roof tie-down straps, brackets, or other connectors should be considered and may be required.

3. Roof sheathing pull-off (suction) pressure

Step 1: Velocity pressure = 14.6 psf (as before)
Step 2: Adjusted velocity pressure = 13.1 psf (as before)
Step 3: Skip
Step 4: Roof sheathing pressure coefficient (suction) = -2.2 (Table 1.9)
Step 5: Roof sheathing pressure (suction) = (13.1 psf)(-2.2) = -28.8 psf

The fastener load depends on the spacing of roof framing and spacing of the fastener.
Fasteners in the interior of the roof sheathing panel usually have the largest tributary area and therefore are critical. Assuming 24” on center roof framing, the fastener withdrawal load for a 12” on center fastener spacing is as follows:

Fastener withdrawal load = (fastener spacing)(framing spacing) (roof sheathing pressure)
= (1 ft)(2 ft)(-28.8 psf) = -57.6 lbs

This load exceeds the allowable capacity of minimum conventional roof sheathing connections (i.e., 6d nail). Therefore, a larger nail (i.e., 8d) would be required for the given wind condition. At appreciably higher wind conditions, a closer fastener spacing or higher capacity fastener (i.e., deformed shank nail) may be required.

4. Load on a roof truss

Step 1: Velocity pressure = 14.6 psf (as before)
Step 2: Adjusted velocity pressure = 13.1 psf (as before)
Step 3: Skip
Step 4: Roof truss pressure coefficient = -0.9, +0.4 (Table 1.9)
Step 5: Determine design wind pressures

(a) Uplift = -0.9 (13.1 psf) = -11.8 psf
(b) Inward = 0.4 (13.1 psf) = 5.2 psf

Since the inward wind pressure is less than the minimum roof live load (i.e., 15 psf, Table 1.4), the following load combinations would govern the roof truss design while the D+W load combination could be dismissed (refer to Table 1.1):

D + (Lr or S)
0.6D + Wu*
*The net uplift load for truss design is relatively small in this case (approximately 3.5 psf) and may be dismissed by an experienced designer.

5. Load on a rafter

Step 1: Velocity pressure = 14.6 psf (as before)
Step 2: Adjusted velocity pressure = 13.1 psf (as before)
Step 3: Skip
Step 4: Rafter pressure coefficient = -1.2, +0.7 (Table 1.9)
Step 5: Determine design wind pressures

(a) Uplift = (-1.2)(13.1 psf) = -15.7 psf
(b) Inward = (0.7)(13.1 psf) = 9.2 psf

Rafters in cathedral ceilings are sloped, simply supported beams, whereas rafters that are framed with cross-ties (i.e., ceiling joists) constitute a component (i.e., top chord) of a site built truss system. Assuming the former in this case, the rafter should be designed as a sloped beam by using the span measured along the slope. By inspection, the minimum roof live load (D+Lr) governs the design of the rafter in comparison to the wind load combinations (see Table 3.1). The load combination 0.6 D+Wu can be dismissed in this case for rafter sizing but must be considered when investigating wind uplift for the rafter-to-wall and rafter-to-ridge beam connections.

6. Lateral (out-of-plane) wind load on a wall stud

Step 1: Velocity pressure = 14.6 psf (as before)
Step 2: Adjusted velocity pressure = 13.1 psf (as before)
Step 3: Skip
Step 4: Wall stud pressure coefficient = -1.2, +1.1 (Table 1.9)
Step 5: Determine design wind pressures

(a) Outward = (-1.2)(13.1 psf) = -15.7 psf
(b) Inward = (1.1)(13.1 psf) = 14.4 psf

Obviously, the outward pressure of 15.7 psf governs the out-of-plane bending load design of the wall stud. Since the load is a lateral pressure (not uplift), the applicable load combination is D+W (refer to Table 1.1), resulting in a combined axial and bending load. The axial load would include the tributary building dead load from supported assemblies (i.e., walls, floors, and roof). The bending load would the be determined by using the wind pressure of 15.7 psf applied to the stud as a uniform line load on a simply supported beam calculated as follows:

Uniform line load, w = (wind pressure)(stud spacing)
= (15.7 psf)(1.33 ft*)
*assumes a stud spacing of 16 inches on center
= 20.9 plf

Of course, the following gravity load combinations would also need to be considered in the stud design (refer to Table 1.1):

D + L + 0.3 (Lr or S)
D + (Lr or S) + 0.3 L

It should be noted that the stud is actually part of a wall system (i.e., sheathing and interior finish) and can add substantially to the calculated bending capacity.

EXAMPLE 1.3 Design Earthquake Load Calculation

Given

- Site ground motion, Ss = 1g
- Site soil condition = firm (default)
- Roof snow load < 30 psf
- Two-story home, 28' x 44' plan, typical construction

Find

Design seismic shear on first-story end wall assuming no interior shear walls or contribution from partition walls

Solution

1. Determine tributary mass (weight) of building to first-story seismic shear

Roof dead load = (28 ft)(44 ft)(15 psf) = 18,480 lb
Second-story exterior wall dead load = (144 lf)(8 ft)(8 psf) = 9,216 lb
Second-story partition wall dead load = (28 ft)(44 ft)(6 psf) = 7,392 lb
Second-story floor dead load = (28 ft)(44 ft)(10 psf) = 12,320 lb
First-story exterior walls (1/2 height) = (144 lf)(4 ft)(8 psf) = 4,608 lb
Assume first-story interior partition walls are capable of at least supporting the seismic shear produced by their own weight

Total tributary weight = 52,016 lb

2. Determine total seismic story shear on first story

SDS = 2/3 (Ss)(Fa) (Equation 1.8.2)
= 2/3 (1.0g)(1.1) (Fa = 1.1 from Table 1.11)
= 0.74 g

$$V = \frac{1.2S_{DS}}{R} W$$

$$= \frac{1.2(0.74g)}{5.5} (52{,}016 \text{ lb}) \qquad (R = 5.5 \text{ from Table 1.12})$$

= 8,399 lb

3. Determine design shear load on the 28-foot end walls

Assume that the building mass is evenly distributed and that stiffness is also reasonably balanced between the two end walls. With the above assumption, the load is simply distributed to the end walls according to tributary weight (or plan area) of the building. Therefore,

End wall shear = 1/2 (8,399 lb) = 4,200 lb

Note that the design shear load from wind (100 mph gust, exposure B) in Example 1.2 is somewhat greater (5,912 lbs).

Appendix A

Unit Conversions

The following list provides the conversion relationship between U.S. customary units and the International System (SI) units. A complete guide to the SI system and its use can be found in ASTM E 380, Metric Practice.

To convert from	to	multiply by
Length		
inch (in.)	meter(μ)	25,400
inch (in.)	centimeter	2.54
inch (in.)	meter(m)	0.0254
foot (ft)	meter(m)	0.3048
yard (yd)	meter(m)	0.9144
mile (mi)	kilometer(km)	1.6
Area		
square foot (sq ft)	square meter(sq m)	0.09290304
square inch (sq in)	square centimeter(sq cm)	6.452
square inch (sq in.)	square meter(sq m)	0.00064516
square yard (sq yd)	square meter(sq m)	0.8391274
square mile (sq mi)	square kilometer(sq km)	2.6
Volume		
cubic inch (cu in.)	cubic centimeter(cu cm)	16.387064
cubic inch (cu in.)	cubic meter(cu m)	0.00001639
cubic foot (cu ft)	cubic meter(cu m)	0.02831685
cubic yard (cu yd)	cubic meter(cu m)	0.7645549
gallon (gal) Can. liquid	liter	4.546
gallon (gal) Can. liquid	cubic meter(cu m)	0.004546
gallon (gal) U.S. liquid*	liter	3.7854118
gallon (gal) U.S. liquid	cubic meter(cu m)	0.00378541
fluid ounce (fl oz)	milliliters(ml)	29.57353
fluid ounce (fl oz)	cubic meter(cu m)	0.00002957
Force		
kip (1000 lb)	kilogram (kg)	453.6
kip (1000 lb)	Newton (N)	4,448.222
pound (lb)	kilogram (kg)	0.4535924
pound (lb)	Newton (N)	4.448222
Stress or pressure		
kip/sq inch (ksi)	megapascal (Mpa)	6.894757
kip/sq inch (ksi)	kilogram/square centimeter (kg/sq cm)	70.31

Appendix A - Unit Conversions

To convert from	to	multiply by
pound/sq inch (psi)	kilogram/square centimeter (kg/sq cm)	0.07031
pound/sq inch (psi)	pascal (Pa) *	6,894.757
pound/sq inch (psi)	megapascal (Mpa)	0.00689476
pound/sq foot (psf)	kilogram/square meter (kg/sq m)	4.8824
pound/sq foot (psf)	pascal (Pa)	47.88
Mass (weight)		
pound (lb) avoirdupois	kilogram (kg)	0.4535924
ton, 2000 lb	kilogram (kg)	907.1848
grain	kilogram (kg)	0.0000648
Mass (weight) per length)		
kip per linear foot (klf)	kilogram per meter (kg/m)	0.001488
pound per linear foot (plf)	kilogram per meter (kg/m)	1.488
Moment		
1 foot-pound (ft-lb)	Newton-meter (N-m)	1.356
Mass per volume (density)		
pound per cubic foot (pcf)	kilogram per cubic meter (kg/cu m)	16.01846
pound per cubic yard (lb/cu yd)	kilogram per cubic meter (kg/cu m)	0.5933
Velocity		
mile per hour (mph)	kilometer per hour (km/hr)	1.60934
mile per hour (mph)	kilometer per second (km/sec)	0.44704
Temperature		
degree Fahrenheit (°F)	degree Celsius (°C)	$t_C = (t_F-32)/1.8$
degree Fahrenheit (°F)	degree Kelvin (°K)	$t_K = (t_F + 459.7)/1.8$
degree Kelvin (°F)	degree Celsius (°C)	$t_C = (t_K -32)/1.8$

*One U.S. gallon equals 0.8327 Canadian gallon
**A pascal equals 1000 Newton per square meter.

The prefixes and symbols below are commonly used to form names and symbols of the decimal multiples and submultiples of the SI units.

Multiplication Factor	Prefix	Symbol
$1,000,000,000 = 10^9$	giga	G
$1,000,000 = 10^6$	mega	M
$1,000 = 10^3$	kilo	k
$0.01 = 10^{-2}$	centi	c
$0.001 = 10^{-3}$	milli	m
$0.000001 = 10^{-6}$	micro	µ
$0.000000001 = 10^{-9}$	nano	n